東莞市宏尚電子有限公司
Dongguan Hongshang Electronics Co.,Ltd

Material (材料)>>>

Plastic material (塑胶材质) : PBT/PA6T/PA9T/LCP+30%G.F
Color (颜色): Black、White、blue
Insrlator Material(绝缘材料): Polyester(UL94V–0)
Contact Material (接触材料) : Brass
Contact Plating (接触电镀): Au Or Sn over 40u" Ni

SPECIFICATIONS (规范)>>>

Current Rating (额定电流): 3.0 Amps
Withstanding Voltage (耐电压) : AC 1000Vmin/Minute
Insulation Resistance(绝缘电阻): 1000MΩ Min
Contact Resistance (接触电阻) : 20 mΩ MAX
Operation Temperature(工作温度): –40℃to+105℃

051–01

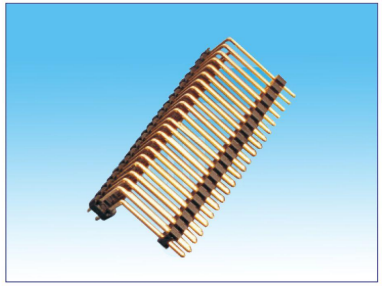

051–02

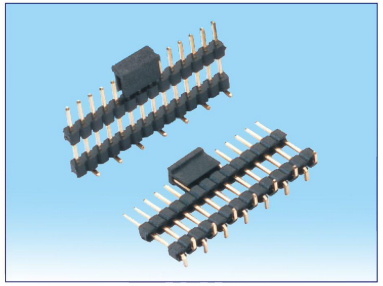

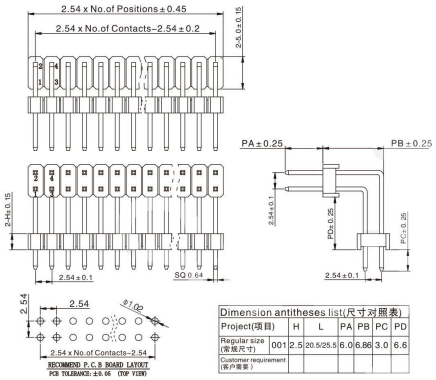

Dimension antitheses list(尺寸对照表)							
Project(项目)		H	L	PA	PB	PC	PD
Regular size (常规尺寸)	001	2.5	20.5/25.5	6.0	6.86	3.0	6.6
Customer requirement (客户需要)							

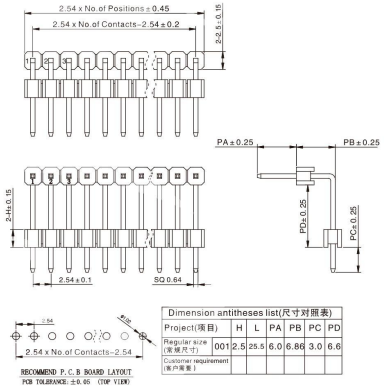

Dimension antitheses list(尺寸对照表)							
Project(项目)		H	L	PA	PB	PC	PD
Regular size (常规尺寸)	001	2.5	25.5	6.0	6.86	3.0	6.6
Customer requirement (客户需要)							

Material code(物料编码)>>>

P	254	XXX	A	B	C	G0	001
品名	间距	Pin位	类型	材质	包装方式	电镀	尺寸
Type P=Pin Header	Pitch 2.54=254	No.of Rows 1x01–40Pin 2x01–40Pin	Connector Type A=A–Right Angle	Insulator Material Option A=BK–PBT B=BK–PA6T C=BK–PA9T D=LCP S=Special	packing A=Bag B=Box C=Tube D=Tape Reel	Contact Plating SN:Tin G0:Gold Flash G2:1U"Gold G3:3U"Gold G4:5U"Gold G5:10U"Gold G6:15U"Gold Standard:G0	Size H/L/PA/PB/PC/PD