受控文件

http://www.szzdjmkj.com

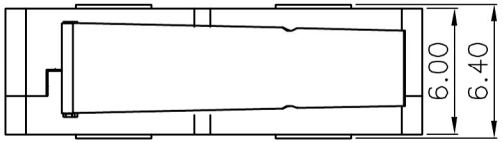

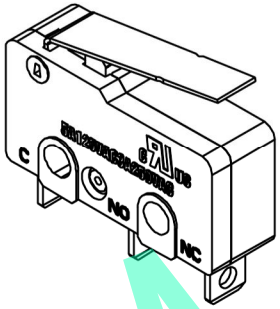

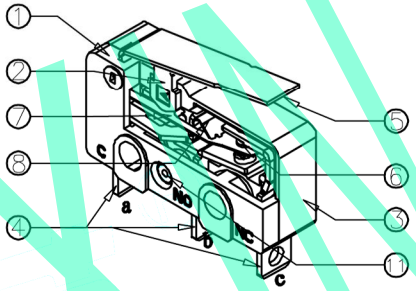

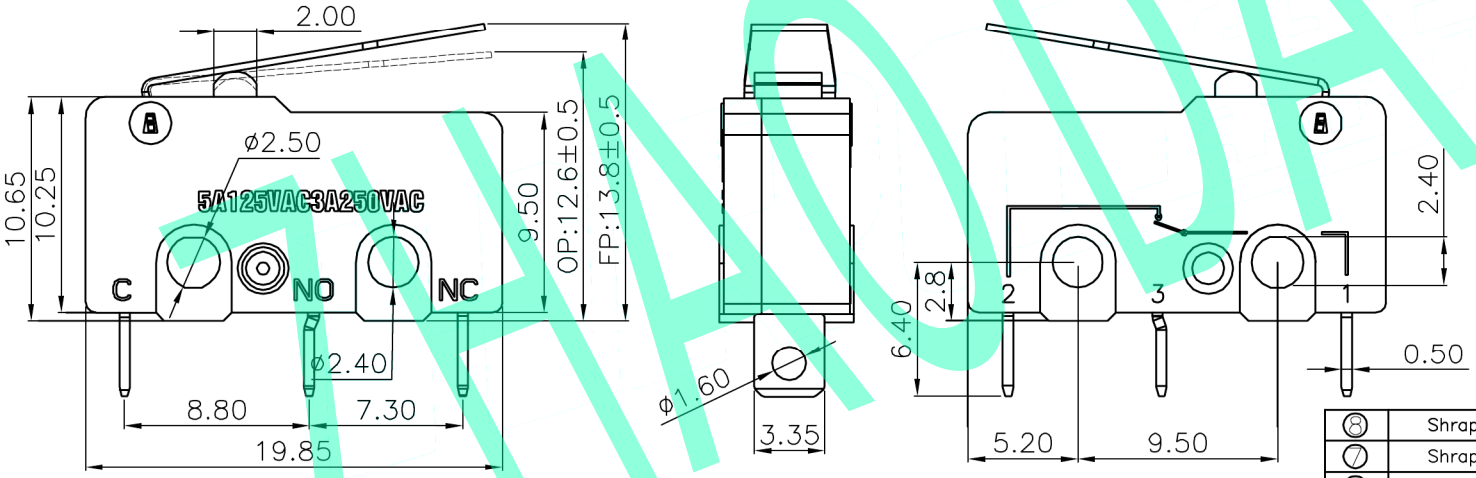

NOTE:

1.Rating:AC125V 5A/250V 3A

2.Operating froce:30±10gf

3.Mechanical Life:1,000,000

3.Electrical Life:6000−10,000

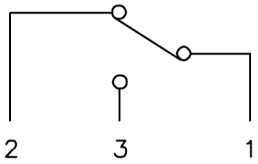

Circuit Diagram

ITEM	PART NAME	TER'NO.	QTY.	MATERIAL	FINISHING	REMARK
⑧	Shrapnel 2	——	1	Copper Alloy	——	——
⑦	Shrapnel 1	——	1	Beryllium Copper	——	——
⑥	Contact	——	1	Copper Alloy	Plating silver	——
⑤	Lever	——	1	Stainess Steel	——	——
④	Terminal	——	3	Copper Alloy	Plating silver	——
③	Housing	——	1	PBT	Black	——
②	Knob	——	1	PBT	Black	——
①	Cover	——	1	PBT	Black	——

APPROVALS		DATE	深圳市兆达鑫科技有限公司	
DRAWN	刘志强	2010.01.01		
CHECKED			TITLE:	MICRO SWITCHS
APPROVALS			PART NO.	MX-90-25
TOLERANCES ARE	30~以上 ±0.30; 10~20 ±0.25; 5~10 ±0.20; ~ 5 ±0.20	ANGLE ±2°	UNIT: mm	SCALE: 1:1 / PROJ:
			DRAWING NO.	——
			SHEET 1 OF 1	

ECN NO.	REV.	DATE.	DESCRIPTION.	CHANGE.	CHECK.	APPRO.
——	A	——	NEW	——	——	——

ZHADA XIN