受控文件

http://www.szzdjmkj.com

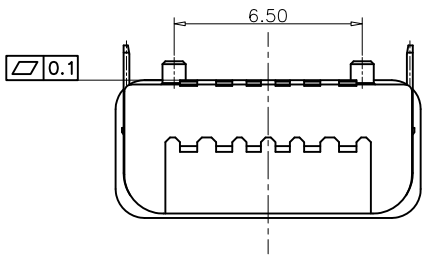

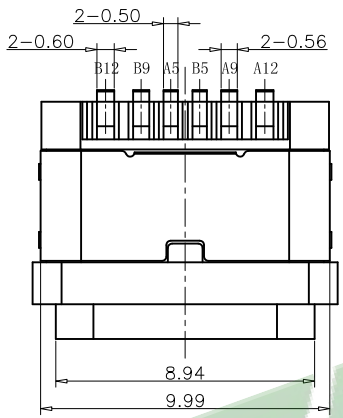

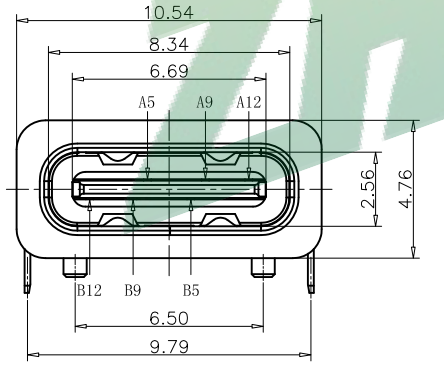

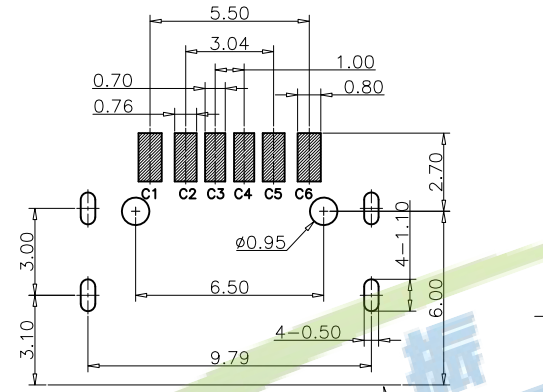

PRODUCT EDGE

RECOMMEND P.C.B LAYOUT(COMPONENT SIDE)

TOLERANCE FOR PCB LAYOUT IS ±0.05

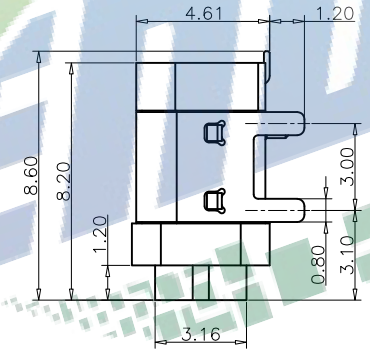

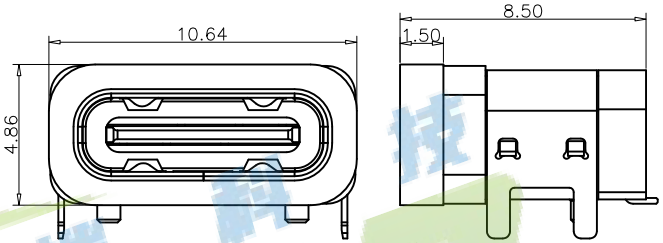

加防水圈示意图

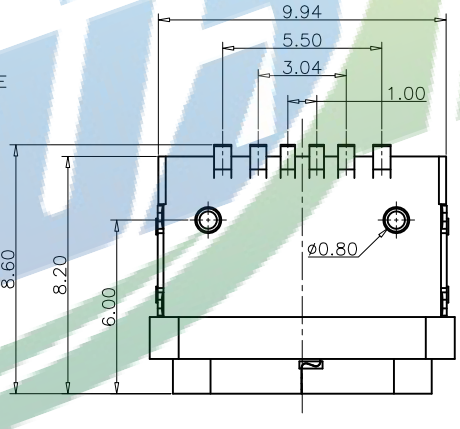

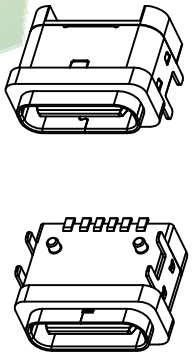

NOTES:

SPECIFICATION:

1.CURRENT RATING: 3.0A MAX
2.VOLTAGE: 100 VAC
3.TEMPERATURE RANGE: -30°C~+85°C
4.CONTACT RESISTANCE: 40 MILLIONHM MAX
5.INSULATION RESISTANCE: 100 MEGOHMS MIN
6.LNSERTION FORCE: 5N~20N
7.UNMATING FORCE: 8N-20N
8.DURABILITY: 10000 CYCLES
9.WATER PROOFNESS:THISPRODUCTIS BASED ON IPX7.

TABLE:

NO	PART	Q'TY	Material
1	SHELL	1	STAINLESS STEEL,NI PLATED
2	CONTACT	6	COPPER STEEL,TIN/Au/NI PLATED
3	MID PLATE	1	STAINLESS STEEL,NO PLATING
4	1MD HOUSING	1	HIGH TEMPERATURE RESISTANT PLASTIC BLACK UL94 V-0
5	2MD HOUSING	1	HIGH TEMPERATURE RESISTANT PLASTIC BLACK UL94 V-0
6	SHIELDING PLATE	1	STAINLESS STEEL,NI PLATED

PIN ASSIGNMENT:

PIN NO	A1&B12	A4&B9	A5	B5	A9&B4	A12&B1
SIGNAL NAME	GND	VBUS	CC1	CC2	VBUS	GND
PCB PAD NO.	C1	C2	C3	C4	C5	C6

振端精密科技（深圳）有限公司
Zhenduan precision technology (Shenzhen) Co., Ltd

TOLERANCE: X.X ±0.30, X.XX ±0.20, X.XXX ±0.10, X.° ±10°, X.X° ±8°, X.X° ±5°	DRAWED BY: 刘志强	DATE: 2015.08.18	PART NAME: TYPE-C 6P防水单排四脚L8.2
	CHECKED BY: 李 毅	DATE: 2015.08.18	PART NO. SEE TABLE
			MOLD NO.
UNIT: mm [inch]	APPROVED BY: 张少辉	DATE: 2015.08.18	DRAW NO: ZDHS0600FS058
SCALE:1:1 SIZE: A4			SHEET NO. 1 OF 1