受控文件

http://www.szzdjmkj.com

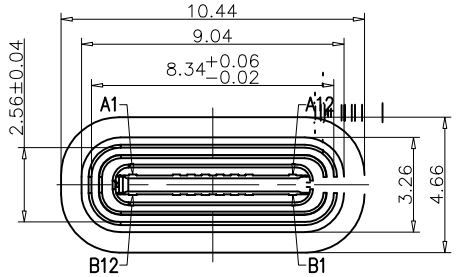

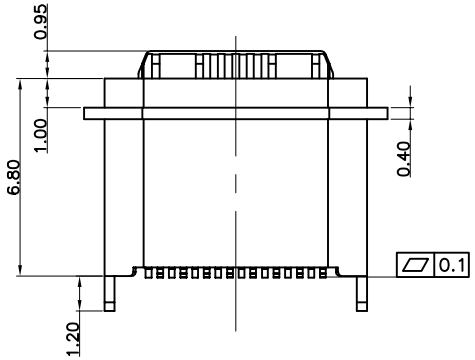

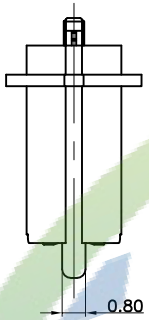

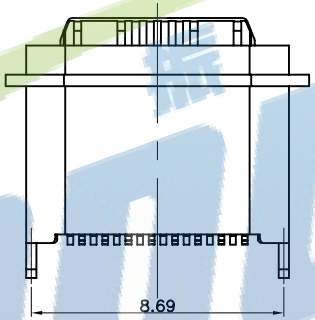

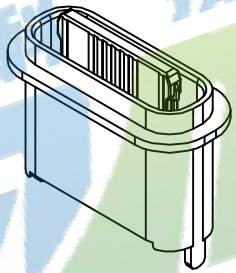

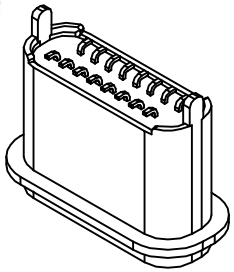

NOTES:

SPECIFICATION:

1.CURRENT RATING: 3.0 A
2.VOLTAGE RATING: 3.0 V
3.VBUS & GND PINS AND OTHER PINS: 40mΩ/PIN MAX
SHIELD: 50mΩ/MAX
LLCR MAX. CHANGE OF ALL PINS: 10Ωm
4.INSULATION RESISTANCE: 100MΩ MIN
5.DIELECTRIC WITHSTAND VOLTAGE,AC 100V FOR 1MIN
6.LNSERTION FORCE: 0.5~2.0kgf
7.UNMATING FORCE: 0.8-2.0kgf
8.DURABILITY: 10000 CYCLES
9.OPERATING TEMPERATURE: -35°C~+85°C
10.THE PEAK TEMPERATURE ON THE BOARO SHALL BE MAINTAINED FOR 10 SECONDS AT 260°C
11.WATERPROOF:IP-X7.

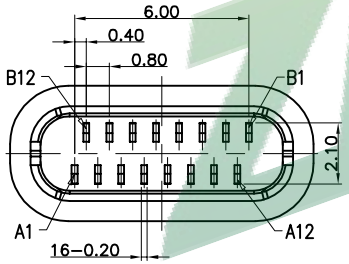

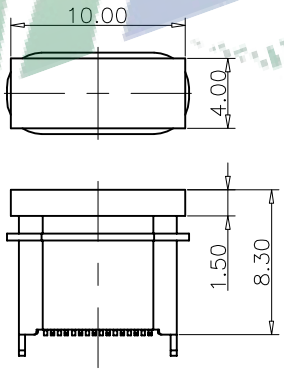

装前塞示意图

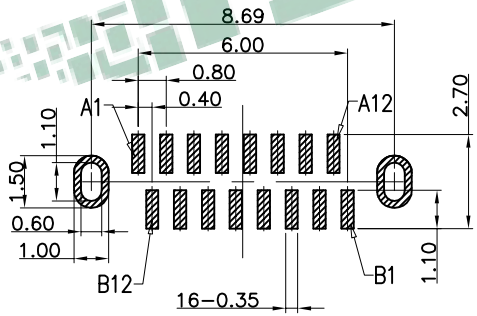

RECOMMEND P.C.B LAYOUT

TOLERANCE UNSPECIFIED ±0.05mm

USB TYPE C PIN ASSIGNMENTS

PIN NUMBER	SIGNAL NAME	PIN NUMBER	SIGNAL NAME
A1	GND	B12	GND
A4	VBUS	B9	VBUS
A5	CC1	B8	SBU2
A6	DP1	B7	DN2
A7	DN1	B6	DP2
A8	SBU1	B5	CC2
A9	VBUS	B4	VBUS
A12	GND	B1	GND

振端精密科技（深圳）有限公司
Zhenduan precision technology (Shenzhen) Co., Ltd

TOLERANCE: X.X ±0.30, X.XX ±0.20, X.XXX ±0.10, X.° ±10°, X.X° ±8°, X.X° ±5°	DRAWED BY : 刘志强	DATE : 2015.08.18	PART NAME: TYPE-C16P防水立贴 H6.8粉末冶金舌头外露0.95
	CHECKED BY: 李 毅	DATE : 2015.08.18	PART NO. SEE TABLE
			MOLD NO.
UNIT: mm [inch]	APPROVED BY: 张少辉	DATE : 2015.08.18	DRAW NO: ZDHS0600FS265
SCALE:1:1 SIZE: A4			SHEET NO. 1 OF 1